Kenora Daily

Miner and News

★ By Mail — $6.00 per annum KENORA, ONTARIO, FRIDAY, JUNE 27, 1958 ★ By Carrier — 15c per week

Ella-Lynns
LADIES' AND CHILDREN'S WEAR
HOME OF KLEVER-KLAD DRESSES

FRANK TOWNSEND

Frank Townsend, who acted as general chairman of the Lions Fair, had a pleasant duty to perform Tuesday evening, when the Club met for the last time before the summer recess. To the applause of the membership, Frank made a small presentation to Bill Johnson for his valued help in staging the fair. President Jerry Van Walleghem welcomed Bill Johnson and Bill Wylie to the meeting, and added his thanks for their valuable help at Fair time.

Community TV Group Welcomes Federal Activity

The Kenora - Keewatin Community T.V. Association at their regular weekly meeting last night welcomed the announcement, from the Federal level that T.V. by the C.B.C., might be forthcoming to several centers in Canada in which Kenora was listed. However as no date had been stated as to the beginning of the project and also that no "in-service" date had been announced the officers and members agreed that the work of the Association who appear to be the only group actively working on the subject of procuring T. V. for the Kenora area must go on and with a renewed outlook.

Should the preliminary survey reports of the C.B.C. staff, reported as being in the area, be favourable no doubt a further announcement will be forthcoming in the not to distant future it was felt.

A vote of thanks was extended to the management of the Kenwood Hotel for affording the use of the dining room and providing the dinner meal for a meeting of the executive on Saturday evening last, when a representative of the private firm, with whom the Association has been in contact with, made a report on his recent trip to Ottawa.

A report from Mr. George Lemay the association's treasurer, was received, which mentioned that subscriptions are being accepted by the Association and so far no expenditures have had to be authorized by the association.

Should the C.B.C. proceed with their plans of providing T.V. here in the area it will be the pleasure of the Association to be in the position to refund the subscriptions to the subscribers who have supported by contributing.

Preceeding adjournment of the meeting the chairman of the Kenora - Keewatin Community T.V. Association was authorized to release any information relative to developments if such was affroded. In the interests of the entire area the Association will remain active on a basis that the entire subject of T.V. is gradually clearing to the satisfaction of all interested and especially those who have voluntarily supported the Association in its endeavours thus far.

John Brestensky Retires On Pension

John Brestensky, Sectionman on the Kenora Division, will work his last day on June 27th, 1958, before being retired on pension.

He entered the service of the Canadian Pacific Railway Company on June 2nd, 1930, as a Sectionman at Vermilion Bay & has worked as such since that date at various points on the Kenora Division and has been at Kenora since May 1st, 1956.

Mr. Brestensky was born in Czechoslovakia on July 19th, and married Anne Badura in Czechoslovakia in 1920, who is still residing there. He served with the Hungarian Army from 1914 to 1918 and was held prisoner by the Russians from 1916 to 1918.

Mr. Brestensky is a member of Local 238 of the Brotherhood of Maintenance of Way Employees. He is interested in fishing and gardening.

He has two daughters, Anne and Mary, both living in Czechoslovakia. Mr. Brestensky intends making his home here after retirement.

"BYE BYE BOOKS"

"No more teachers, no more books . . . . . ", the old refrain is echoing from one end of town to the other as public school children started their summer holidays at noon. Books are closed, desks and lockers cleaned out and waste paper baskets were filled to overflowing as boys and girls alike left the "hallowed hall", to forget about the three R's for the next two months.

For successful grade 8 students, September 2 will see them embark on a new phase on the road by learning as they enter high school. Many of them will also work during the holidays at their first real paying job, again fitting themselves for the future.

Many teachers will say good bye to Kenora as they too leave for farther fields, while others will attend summer school, or enjoy a well earned vacations.

For some this last day of school was not happy since they failed to make the grade and if it is any consolation to them, they are not the first children who didn't pass. Nor will they be the last ones.

When school commences in the fall, they will at least have one advantage over their classmates, they will know what is in store for them in the field of learning.

Parents will now take over their children for the next two months and you can bet your last dollar that when school bells ring September 2nd - the refrian will be - thank goodness - it's time for school again!

Conservatory Lists Theory Results

The following is a list of successful candidates in examinations held recently by the Royal Conservatory of Music of Toronto in Kenora Ont. The names are arranged in order of merit.

GRADE IV THEORY

Harmony

Honours - Lily Rogers.

Counterpoint

Honours - Ann C. Onhaiser.

GRADE III THEORY

Harmony

Honours - Brenda Lovestrand.

Pass - Willard Allan, Ian Barnard, Beverley Ursaki (equal); Lynne Forbes.

History

First Class Honours - Sheila Olfman.

GRADE II THEORY

First Class Honours - Georgette Parkin; Mary Watson; Andrea Beasant, Paul Roy (equal); Gail Moore; Mary L. Bell, Edward Krisko, (equal); Joyce Penner; Darlene Malmquist.

Honours - Robert Pochailo.

Pass - Elizabeth Scott; Sharon Johnson.

GRADE I THEORY

First Class Honours - Mary A. Brett; Cheryl Petrick; Patricia Chop; Larry Chop.

St. Louis School Pupils Design And Make Marionettes

The making of Marionettes while an age old custom, is enjoying a period of popularity, particularly among children in this area. One of the finest group projects presently being carried out is by the pupils of grades 5, 6, 7 and 8 of St. Louis School, Keewatin.

Under the guidance of Sister Jeanne and Mrs. Bradshaw and Mrs. Longe of the Home and School Council, the children, boys and girls alike have been working on the marionettes since early January. Almost completed are twenty figures for three plays, The Shoemaker and the Elves, Snow White and the Seven Dwarfs and Hansel and Gretel. Interest in making the marionettes has been high and the excellence of the puppets shows how keen the pupils are.

The pupils have used their own imaginations in creating the heads of the marionettes & all are different. The bodies are made with moving hands and feet. The children have mastered the complicated arrangement of strings that control the marionettes and they move in a very life-like manner. The instructors state that making marionettes such as these children have made is a real accomplishment. The pupils have also dressed their figures designing and sewing the clothes. Many

(Continued on Page 12)

Bea Van Walleghem Honored By Queen

Mrs. Beatrice Van Walleghem well known Kenora resident, was signally honored today when Her Majesty the Queen graciously sanctioned the appointment of Mrs. Van Walleghem as a Serving Sister in the Order of St. John of Jerusalem.

The order was conferred in recognition of Mrs. Van Walleghem's many years of valued service to the order in Kenora. The entire community extends heartiest congratulations to Mrs. Van Walleghem on her appointment.

POWER PACKED feather-weight

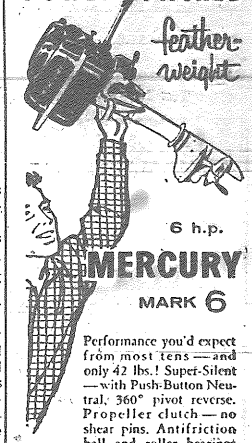

6 h.p.
MERCURY
MARK 6

Performance you'd expect from most tens — and only 42 lbs.! Super-Silent — with Push-Button Neutral, 360° pivot reverse. Propeller clutch — no shear pins. Antifriction ball and roller bearings throughout!

Only $30 Down
24 Months to Pay

WILLIAMS HARDWARE CO. LTD.
Phone 6471 - Kenora, Ont.

Midsummer Sale Now On
JUNE 27 - JULY 12
FREE DRAW
$200 IN CASH
WESTARIO MOTORS
"The Home of Quality Used Cars"
Bill Calder Res. 9339
Ed Lugossy Res. 21W3
Ralph Gibson Res. 7994
OPEN AIR SHOWROOM
8993 — NEXT TO THE FIRE HALL — 8993
OPEN EVENINGS

Customs Brokerage
FAST FRIENDLY SERVICE
TRY
SUTCLIFFE AGENCIES LIMITED
INSURANCE - REALTORS
CUSTOMS BROKERS
Kenora, Ont. — Phone 6474

CUSTOMS-HOUSE BROKER
FOR PROMPT, EFFICIENT CUSTOMS SERVICE
See
The Standard Realty
MORTGAGE LOANS
COMPANY LIMITED
INCORPORATED 1908
INSURANCE
CUSTOMS-HOUSE BROKER - REAL ESTATE BROKER
216 2nd St. S. Phone 6333 Kenora

WHITE ROSE
Specializing In
● Generator Work
● Starters
● Motor Tune Up
● Fuel Pumps, Etc.
SAVE
GENUINE WHITE ROSE GASOLINE
43½¢ GALLON
VET'S CORNER SERVICE STATION
Rabbit Lake — We Pick Up and Deliver — Phone 6818

KEEWATIN NEWS

(By MRS. KEMPER)

FRANK RUSHTON HONORED

The Keewatin United Church annual Sunday School picnic was held at Coney Island on Saturday June 21st.

At the conclusion of the picnic activites the teachers and pupils gathered to honor Mr. F. W. Rushton Sunday School Superintendent who is leaving shortly with his wife and family to reside in Montreal.

John Moore in his address to Mr. Rushton on behalf of the teachers and pupils expressed appreciation for his faithful service for the past eleven years as Sunday School Superintendent.

The presentation of a desk set with an appropriately engraved plaque was made to Mr. Rushton by Pat Zeamer and Ian Bruce.

Congratulations is extended to Mr. and Mrs. A. Nicholson by their many friends and neighbours who are celebrating their 50th Wedding Anniversary on Saturday June 28th.

Miss Mary MacPherson left on Thursday for Winnipeg where she will visit with her uncle and aunt Mr. and Mrs. D. Smith.

Mr. D. Smith visited on Thursday with his brother-in-law and sister Mr. and Mrs. Dougla MacPherson.

USED EQUIPMENT BARGAINS!

At Central Canada's Largest Caterpillar Dealer

Powell Equipment CO. LTD.

Here are 20 of our quality buys located at Winnipeg.

TRACTORS
D4 & Loader $2,975
D6 & Dozer $12,500
TD 18 A & Dozer $5,500
TD 18 A & Cable Control $3,275
TD 18 A & Cable Control $4,875
CAT D8 Tractor $3,475
TRACTOR ATTACHMENTS
CARCO "E" Winch for TD 14 A $850
CARCO "E" Winch for TD 9 ..... $975
CAT 4A Dozer & Control $2,700
SCRAPERS
2 - CAT DW 20 & 456 Scrapers Contact Office for Price
HEIL C 10 ..... $3,775
LE TOURNEAU G - 6-8 cyd. Scraper $1,175
MISCELLANEOUS
CO-OP 13 ft. Cultivator $385
ADAMS No. 48 Elevating Grader $4,400
TRACTOR SPECIALS
2 - TD 18 A & Dozers with H.D. Crankcase and rad. guards, pull hooks. 22" shoes & snow sprockets. Mounted on these units are Isaacson front cable control & Angle Dozer ..... $2,975 ea.
MECHANICS SPECIAL
CAT RD7 Tractor & Dozer 9G series with 18" heat treated grousers & lights, additionally there is La Plant Choate Hyd. Control & Dozer and rear cable Control all for only $1,875
Almost New . . . I.H.C. TD 18 & Dozer 182 Series used only 6 months with 1,200 hrs. with 20" grousers, lights, H.D. crankcase & rad. guards, PLUS an I.H.C. Hyd. Angle Dozer & Control $19,500
D8 Tractor & Dozer with 22" shoes, rear cable control & Le Tourneau cable angle Dozer $2,975

WRITE TODAY!
For our complete "USED" EQUIPMENT BULLETIN" - giving you accurate information on over 200 PIECES OF GOOD USED EQUIPMENT AND MACHINERY. Your enquiry will receive immediate attention.

POWELL EQUIPMENT CO. LTD.

Our Sales Representative is:
MR. EARL PETERSON,
317 6th St. South
Kenora - Ontario
Phone 8227

CAT. Caterpillar and Traxcavator are registered trade marks.

LOCAL SEPTIC TANK CLEANING
PROMPT SERVICE
PHONE 9044

Ukrainian School Held Graduation Exercises Wed.

Graduating exercises of the Ukrainian School were held on Wednesday evening at seven o'clock in the Ukrainian Literary Society Hall with parents and friends in attendance.

Oral examinations were held followed by the issuing of diplomas by the Ukrainian teacher, Mr. C. Yahodski. A program recorded earlier was presented with Marusra Ratusniak, Vicky Kitt and Dari Zurkan taking part.

There was a special treat for the children donated by the Ukrainian Women's Association. A vote of thanks from the parents was expressed by Mrs. N. Stepanik.

Appreciation for the work done during the year was also expressed by Mr. P. Horbatiuk, vice president of the Ukrainian Literary Society and by Mr. Alex Barchuk, President of the Ukrainian Canadian Committee to the teacher, Mr. C. Yahodski, who with his wife left for Toronto following the program.

Prior to the graduation exercises, the school children with their parents held a picnic, Saturday at Rushing River. Games and a weiner roast were enjoyed by all.

Thomas Edison used only short stub pencils that would fit lying down in his right hand vest pocket.

Ships Cut Tonnage Due To Low Water

Fort William—Low water levels in the Great Lakes are costing lake shippers considerable sums of money, a spokesman for N. M. Paterson & Sons Ltd., which operates a Great Lakes fleet, said today.

Gordon Hacquoil said in an interview that the low levels, especially in the St. Clair and St. Marys rivers, has caused the Paterson firm to reduce tonnages.

He said the firm had lost considerable revenue in both ore and grain shipping operations. Other shippers also were operating on reduced draft scales.

Lake Superior last month dropped eight inches below the average level in May, 1957. It has risen slightly in June.

When the first vessels began arriving at lakehead ports to open the 1958 navigation season, skippers without exception spoke of 'extremely low water levels. These they blamed for spring ice concentrations in lower lakes where such situations do not normally exist.

Since the opening of navigation, levels have shown little improvement.

Engineers at Sault Ste. Marie report water levels below average on all the Great Lakes.

Cargo reductions are necessary for the most part in the St. Clair and St. Marys rivers. A seven-inch drop in the St. Marys necessitates a cargo reduction of around 800 tons.

Smaller operators too are feeling the pinch. For the first time in a lifetime of commercial fishing, Joe Singleton of Squaw Bay, has not been able to get his beached fishing craft into the water.

Asked why he did not refloat it by erecting a skidway to the waters edge, the fisherman replied: "That is not enough. The water is so low I would have to get it out about a quarter-mile before it would float free. I never saw anything like it before.

BUY Any of the Newest
NECCHI-BERNINA
SEWING MACHINES
and get Double Your Money's Worth
For Free Home Demonstration
Phone your Kenora District Dealer Any Time
PHONE 2344
Trade-Ins - Terms

LAKELAND DAIRIES
LIMITED
wish to announce that
REGULAR
MILK DELIVERIES
will be made on
TUESDAY, JULY 1st
Our Drivers will observe the Usual Wednesday Holiday

BLONDIE

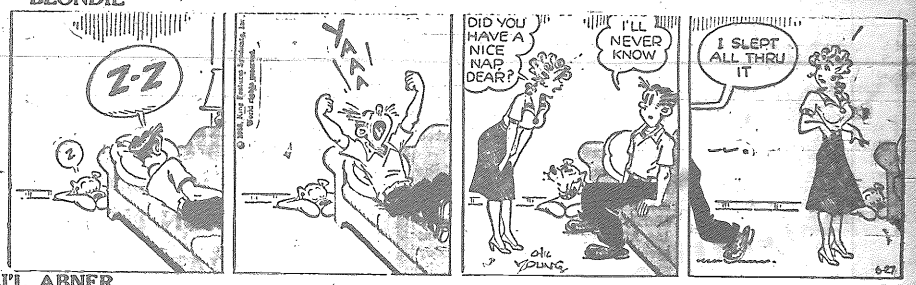

LI'L ABNER

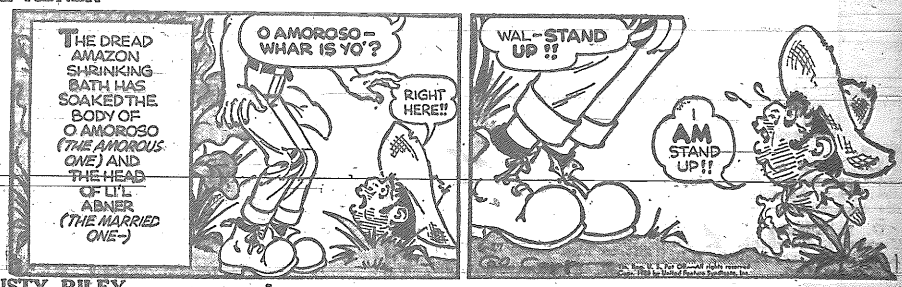

RUSTY RILEY

BUZ SAWYER

WANT-AD ORDERING MADE EASY

Phone 8936 - Say "Charge It"

FOR SALE

FOR SALE — 1957 Meteor Convertible. Automatic transmission. Power windows. 11,000 miles. Will take truck or car on trade. Apply Box 87 Miner and News.

FOR SALE — 4 room house. Lights. Water. Bath. Insulated. Fenced. 5 years old. 24' x 24' Price $3,500. P. Huntbatch. Redditt.

FOR SALE — 48 Olds. sedan. Radio. Heater. Fair running condition. $195 or best offer. 1415 Ninth Street North or phone 9540.

FOR SALE — 1500 Watt Kohler automatic light plant. 16 foot Aluminum boat. Box 88 Miner and News.

FOR SALE — Good supply of black shiners. Gus Sundquist. North Government Road, Keewatin.

FOR SALE — Pure Bred German Shepherd Pups. Males $42.00. Females $37.00. Papers $5.00. Phone 8834 or write Box 85 Miner and News.

FOR SALE — Year old Weimaraner pup. Female with pedegree. $30.00 Excellent with children. Phone 2829.

FOR SALE — 153 acre farm. Modern and all outbuildings. 10 miles from town. M. A. Derouard, R. R. 1 Kenora.

FOR SALE — 30 foot motor boat. Ready to operate. Apply to Standard Realty Co. Ltd.

FOR SALE —, Household furnishings. Phone D. Murphy, 2738.

FOR SALE — Modern 4 room house. 1340 East Highway. Phone 6507.

FOR SALE — New 3 bedroom house. Donkirk Heights. Phone 9632.

HOUSE FOR SALE — 334 2nd. Street North.

FOR SALE — Good used boats. 15 and 16 foot. Apply Parkland camp, 10 miles on east highway. Phone 32-W-2.

FOR SALE — Hallicrafters Radio. Model TW-2000. Original cost $209.95. Sell for $155. Contact Downey Wong, Bamboo Gardens after 6.00 p.m.

FOR SALE — 1948 Chev. 2 door coach. Very good. Reliable runner. Phone 8439.

FOR SALE — 3 lots, sewer and water. Good land, no rock. Apply 709 13th Avenue North.

ESTATE FOR SALE

Bids will be received at the office of the undersigned to purchase the estate of the late Frank S. Iriam located at 1025 Park St.

W. J. MAZEPPA AGENCIES
34 Main Street
Kenora, Ontario

WANTED

Young Man Requires Job in town between hours of 6 p.m. and 7 a.m. Write Box 695 Kenora.

Lady Requires Work, Office or house cleaning. Phone 9759 after 5.00 o'clock.

WANTED TO RENT — 5 room house in town or town limits. Box 598, Kenora.

PAT'S
KENORA STATIONERY AND NOVELTY SHOP
Office Stationery
Steel or Wood
Office Furnishings
REMINGTON QUIET-RITER PORTABLE TYPEWRITERS
ADDING MACHINES AND CASH REGISTERS
Wedding Invitations
Record Players & Recordings
Rust Craft Greeting Cards
Novelties and Toys Etc
218 Second Street South
Phone 6708

FOR RENT

FOR RENT — 5 room fully modern home in Lakeside from July 1 to November 1. Phone 9289 between 8 a.m. and 5 p.m.

EARL PETERSON
SALES REPRESENTATIVE
317 - 6TH STREET PHONE 8227
GLEN CATES
RESIDENT SERVICEMAN
LAKESIDE BEACH, KENORA
PHONE 9199
POWELL EQUIPMENT CO., LTD.
YOUR "CATERPILLAR" DEALER

KENORA JEWELLERY
Gifts for All Occasions
Watches and Repairs
Jewellery
LOCATION - Corner of Second St. S. and Matheson St.

Mastercraft UPHOLSTERERS
Custom Made
Draperies and Venetian Blinds
Canvas and Metal Awnings
Dial 7933 For Free Estimates

PROFESSIONAL

H. R. CHURCHILL
CHARTERED ACCOUNTANT
113 Main St. Phone 6502

JACK K. DONER, L.L.B.
Barrister and Solicitor
Imperial Bank Building

T. A. O'FLAHERTY
Barrister and Solicitor
Law Office, Bergman Building
2nd Street South - Phone 6612

W. EDGAR NORTON, D.C.
Doctor of Chiropractic
CHIROPRACTOR
Standard Block - 128 Main St
Monday thru Friday
9.30 - 12 a.m. — 1.30 - 5.30 p.m.
Saturday — 9 - 12 a.m.
Friday Evenings 7 - 9 p.m.
Phones
Res. 9649 - Office 8589

H. D. Tansley, A.A.O.
AND ASSOCIATE OPTOMETRISTS
Hours: 9 - 5.30 — Wed. 9 - 1
30 Main St. S - Phone 7047
(Next to the Public Library)

Funeral Directors

Brown Funeral Home
(Kenora) Ltd.
Funeral Directors
429 2nd St. S. Dial 8633

"Say It With Flowers"
We Specialize In Wedding Arrangements and Funeral Designs
Ken Page - Florist
PHONE 8215

Flowers by Wire from
FOSTER'S
Specialize in Family Wreaths, Sprays, Crosses Pillows, any Design
Phone 6522

C. W. ROTNEM CO. LTD.
Lakeside Plumbing and Heating
PHONE 7742

THE MAN FROM MARR'S
Says:
Have you seen the Beautiful MID STATE CANADIAN STAR
Home on Wheels
Size 41' x 10', two bedrooms, complete bathroom and featuring front end kitchen. Completely furnished. Priced right and now on display.
Terms Arranged
W. H. MARR LTD.
400 Railway St. - Phone 6404
INTERNATIONAL CONSTRUCTION EQUIPMENT DISTRIBUTORS

READ THE CLASSIFIEDS

Swen Bowman
ELECTRICAL CONTRACTOR
Wiring
Lighting
Fixtures
Estimating
PHONE 7447
110 Regina Ave.

Government Certified High Pressure Welder
Pipe Welding Specialists
METAL FABRICATING AND WELDING SHOP
Ornamental Iron Work
Steam Boiler Repairs
Electric Welding
Torch Cutting
Repair Work
PHONE 7689
L. J. ROSMUS
1431 Pine
Portage Road
Kenora, Ont.

— Wendy's —
218 - 2nd Street South
THE HOME OF FINE TAILORING
Repairs Alterations
Dressmaking
PHONE 7161
Mrs. B. Newman

KENORA DAILY MINER AND NEWS
Published every afternoon, Monday through Saturday at 234 Second Street South, Kenora, Ontario.
Proprietors:
The Kenora Miner and News Limited.
Stuart King, Publisher and Editor.
Bill Wylie, Advertising Manager.
Frank Godolphin, Comptroller.
Member of the Canadian Daily Newspapers association. All rights of republication of local news or special dispatches published here are reserved.
Authorized as Second Class Mail, Post Office Department, Ottawa.

SHERWIN-WILLIAMS
PAINT and WALLPAPER STORE
COMPLETE STOCK OF
WALLPAPER - MARINE FINISHES
ART SUPPLIES
INTERIOR & EXTERIOR FINISHES
Phone 6773 — Main Street — Kenora, Ont.

BARGAIN IN AID — In Honduras, carpenter would have to pay $60 for the tools in the CARE woodworker's kit you can send for a contribution of $20, including delivery. Send your contribution to CARE Self-Help, CARE of Canada, Ottawa.

FOR SALE
5 room fully modern home on Park St.
6 room fully modern home in the East End.
5 room fully modern home at Donkirk Heights.
4 room fully modern home close to High School
Fully modern duplex home on Valley Drive - 5 and 4 room suites.
Duplex home near High School (4 room suites).
Country estate on Airport Road with modern home, a summer home and a recreation building on 5 acres of land.
Low Down Payments may be arranged to responsible parties.
W. J. MAZEPPA AGENCIES
34 Main St. Phone 7820

Pantomime players were favorite performers in Rome as early as the fourth century BC.

The rigadoon has been danced in the south of France since at least the 17th century.

Most dances of New Mexico Indians actually are forms of prayer.

FOR SALE
6 room non-modern home on 7 acres of land, close to town on Round Lake road. Good well water.
9 room semi-modern home in East end of town on 2 lots. Good well water.
W. J. MAZEPPA AGENCIES
34 Main St. S. - Phone 7820

FIRST CLASS
PAINTING VARNISHING
CABINS FLOORS
GARAGES FURNITURE
PHONE 2229
9457

Billing Machine Operator
or
PERSON WILLING TO LEARN
REQUIRED BY LOCAL OFFICE
EXCELLENT WORKING CONDITIONS
APPLY
BOX 89, MINER & NEWS

WARNING

The general public is warned that fishing off the floating pulpwood and booms in Matheson Bay is an unsafe practice as pulpwood is now being moved from this storage bay with the consequent loosening up of the wood.

Persons in the habit of fishing in this location should discontinue this practice immediately due to the extreme danger.

The Ontario-Minnesota Pulp and Paper Company Limited
LOGGING DIVISION

WHITE ROSE SERVICE STATION

WE SERVICE ALL MODELS AND MAKES

14 Point Check ONLY $1.50

- ★ Lubricate All Fittings
- ★ Lubricate Steering Box
- ★ Lubricate Starter
- ★ Lubricate Generator
- ★ Lubricate Distributor
- ★ Lubricate Carburator Linkage
- ★ Springs if Needed
- ★ Check Rad
- ★ Change Oil if Needed
- ★ Sweep out Car
- ★ Check All Tires
- ★ Check Transmission & Differential
- ★ Check for Work Needed
- ★ Clean Glass

For Appointment Phone 8984

KENORA MOTOR PRODUCTS LTD.

MAIN ST. — KENORA

SLOW DOWN AND LIVE!

"Slow down and live" is the advice to drivers being repeated over and over again across Canada and throughout the United States, during the heavy vacation travel months. In Ontario, to prevent the needless loss of life and injury in traffic accidents caused by unreasonable desire to go too far and too fast on vacation and holiday journeys, the Ontario Department of Transport will have in operation during the summer, a campaign to persuade drivers to fit their driving to traffic.

"The first hal[illegible] the summer" [illegible] points out Highway Safety Commissioner W. B. G. Reynolds, "comes on July 1st, Dominion Day, and highways to the many resort areas in Ontario will be packed with vacationists. With many things to think about, some drivers are apt to forget the most important thing. . . to be safe and to drive safely.

"Here are some short driving reminders, based on accident experience:

1. Plan for regular stops to rest and stretch.
2. After the vehicle is loaded, try it for acceleration and stopping before venturing on a highway:
3. Be sure the vehicle is in good operation condition.
4. Pack equipment and baggage securely.
5. Make sure your tires are in good condition and properly inflated.
6. Distribute loads as evenly as possible. Heavy loads in the rear raise the front end and at night, low headlight beams become high and glaring.
7. Keep your mind on the traffic picture.
8. Start early and give yourself plenty of time to reach your destination.

St. Louis School

(Continued from Page 1)

[illegible] figures have hair and moustaches.

The pupils hope to present their marionettes in three plays this fall for which they will write the scripts. Boys and girls who made puppets are as follows: David Kruk, Claudia Laliberte, James Litkowski, Anne Marie Levasseur, Noel Laliberte, Raymond La Croix, Mary Ann La Croix, Dennis Gaudreau, Noella Landry, Dennis Bruneau, Benny Bruneau, Sharon Parfitt, Diane Balonyk, Alfred Plessis, Gabor Borbely, Gaston Crowley, Linda Kruk, Carol Naggers, Edwin Kirchner, Albert Plessis.

SHOP AT SAFEWAY

TWO STORES

Main Street - Store - | - Lakeside - Supermarket

FOR YOUR CONVENIENCE

SAFEWAY STORES

MAIN STREET & LAKESIDE SUPERMARKET

WILL BE

OPEN FRIDAY & MONDAY NIGHTS TILL 9 O'CLOCK

SAFEWAY FOOD STORES

SHOP AT SAFEWAY

TWO STORES

LAKESIDE SUPERMARKET | MAIN STREET -STORE-

BEEF ROASTS

Blade, Chuck or Round Bone

..lb 59c

WIENERS

1st Quality - 1 lb. Cello Pkg.

2 for 95c

SMOKED PICNICS

Ready to Eat

lb 59c

FRYERS EVISCERATED Pan Ready .....LB. 55c

BEANS 'N PORK Taste Tells 15 oz. Tin ..... 6 tins 89c

FRUIT JUICES Large, 48 oz. Tin Orange, Blended or Tomato Your Choice ..... 2 for 75c

CANNED HAMS

Canada Packers - Laurel - Swift's

1½ LB. TIN $1.49

CANNED CHICKEN

WHOLE 3¼ LB. TIN $1.29

COFFEE Edward's Vacuum Pack 1 lb. Tin 87c

Princess Louise TOMATOES 28 oz. .. 4 tins $1.00

MILK

Cherub - Tall Tins

6 tins 95c

WATERMELON

Mexican Peacock

10 lbs. and over .....Each 99c

ORANGES

CALIFORNIA

5 lb bag 89c

STRAWBERRIES

California — Heaping Pint Basket

2 for 89c

SAFEWAY

Jack Watterson Ltd.
MEN'S SHOP
198 Main Street S. Phone 7218

SPORTS PAGE

A. A.
P.O. Box 463
Lake of the Woods Group of Alcoholics Anonymous

Paramount
TONIGHT - SATURDAY
Peyton Place
COLOR by DE LUXE CINEMASCOPE
20th Century-Fox Picture

This is a RESTRICTED FEATURE (no person under the age of 18 years will be admitted to the theatre during the playing of this feature.)

Also: News

Due to the length of this feature there will be only one complete show each evening. Doors open 7.00 - show starts 8.00 - feature 8.30.

Matinees Wed., & Fri., at 2.15

Patrons Please Note:
Prices for this Engagement Only

MATINEE
Students (18 years and over) 40c
Adults:
Main Floor 60c - Loges 70c

EVENING
Students (18 years and over) 50c
Adults:
Main Floor $1.00 - Loges $1.10

Patrons Please Note: No Matinee on Tuesday or Thursday

COMING ATTRACTIONS
PERRI
DECISION AGAINST TIME and INVISIBLE BOY
WITNESS FOR THE PROSECUTION

by Bob Baker

Cokes Drop from Unbeaten Ranks

Acme-Kenora Cleaners are all alone in first place today, and the only undefeated team in the league, thanks to the Lumber Kings who edged them 2 - 1 in a fast and thrilling game last night. The game took no longer than an hour to play and was featured by a nip and tuck pitcher's duel all the way. Both Terry McLay and Gary Hanstead held control of the batters and set them down without too much trouble throughout the game. McLay came out the winner, his 3rd without a loss by scattering 6 hits effectively, walked only 2, and fanned 9. Hanstead came out of the game with a 1 - 1 record. He only gave up 5 hits, walked 2 and struck out 4.

Richard Lampshire started the first by dumping a double to left-center, and after moving to third, stole home with two out. From then on McLay hung nothing but goose eggs on the scoreboard. The Lumber Kings drew even in the bottom of the second when Ralph Jacobson singled, moved to second by a walk and third by a ground out, then came home on Tommy Bynski's infield roller. The tie was broken in the fifth when Rod Shewchuk singled with two out, and came home on two errors. Cokes came back in the sixth when Gary Hanstead got as far as second, but a couple of infield pop ups ended the rally.

								R	H
Cokes	1	0	0	0	0	0	-	1	6
Lum. Kings	0	1	0	0	1	X	-	2	5

In the other game played, Dingwalls scored in every inning as they routed 4 hurlers and swept Lakeland away 25 - 6. Up until now the Dingwall nine had been woefully weak on offense, but their latent power came to life as Terry Styles cracked out three singles and a double, Don Brown and Billy Wickham chipped in with three singles each, and all three players had three rbi's Dennis Misurka pitched his team to their first win and blasted a lead-off home run in the second inning. He allowed only 2 hits and chalked up an even dozen strikeouts. Murdock, the first of four Lakeland pitchers was charged with the loss. Little Johnny Lunny smacked a double to acount for one of the two hits Misurka doled out.

										R	H
Lakeland	0	2	2	1	0	1	-			6	2
Dingwall	2	5	4	5	9	X	-			25	16

Much credit is due to the little town of Redditt who are, to say the least, baseball conscious. Over the last few years they turned out some pretty fair teams in senior ball, and now they have organized Little League. Some of our old uniforms were given to them for the time being until they purchase a set of their own. Two games have been played with the local teams. Lakeland won 14 - 11 and Dingwalls won 17 - 1. Saturday night the Lumber Kings travell over to Redditt for a game. Other uniforms have been sent to Johnny Martinson who is a missionary to the Indians at Fort George in Labrador. Our league here in Kenora has been active in helping others to get a start in baseball for the kids.

On Saturday night Lions take on Acme-Kenora Cleaners. Now that Dingwalls have broken into the win column perhaps it is the Lions turn?

Paramount
SATURDAY MATINEE ONLY
BADLANDS of MONTANA
A REGALSCOPE PICTURE 20th CENTURY FOX RELEASE
REX REASON • MARGIA DEAN
BEVERLY GARLAND • KEITH LARSEN
Also: Touchdown Trophies, Orient Express, Love Labor Won
Show Time: Matinee 2.15

PARENTS; This is a special feature for your children. They CANNOT be admitted during the showing of PEYTON PLACE AS THIS FEATURE IS RESTRICTED TO PERSONS 18 YEARS AND OVER.

Off the Cuff

by Rick Hunt

MAJOR PLAYS A MAJOR ROLE

Ripley's "Believe it or Not" has added a new line to its many written volumes on the seemingly impossible. Here it s: "On the night of Thursday June 26, at the Keewatin Baseball Park in the country of Canada, the Norman Cubs defeated the Keewatin North American Indians. 2 - 1. It was the first victory for Norman in twelve starts this season and last season they won but two while droppng twenty. Indeed it was an unusual ball game."

Strange but true is the above report. The Norman Cubs have finally equalled last year's mark in the win column by defeating the team that whipped Dryden in a double header only last Sunday. The Cubs now find themselves battling for the third and final playoff position with this Keewatin nine. After last night's encounter the Norman nine trail the Keewatin crew by a slight four and one half games.

After checkng the schedule one will find that there will be four more games between the Norman Cubs and the Keewatin North American Indians. Two in the desert Park of Kenora and two over in the rolling greens of the flour town. From here to then, the sprawling Cubs will have to come up with four victories over the green and white and in the middle, the Cubs will also have to gain another game to go ahead of Keewatin.

Being behind a team by four and one half games at this time of the season and tying to catch up is like a runner trying to crack the mile in 3 minutes. Maybe it can be done - but the record shows that the Cubs would be the least likely candidates for doing the feat. However, there is that barrier of Ripley's "Believe it or Not" which the Cubs have already cracked.

Say that you are a Norman fan and you want the rosy side of the picture . . . Okay, here is what could happen in this little miracle of overcoming the Keewatin team. First the Keewatin club has to play one more game than the Cubs as the schedule now stands and if they should lose that one encounter the Norman team would find themselves only four games behind.

CHANCES ARE that the Norman - Keewatin games will prove to be the turning points for either the Cubs or the Indians. If Norman should win these four against Keewatin and both teams keep up a five hundred average in the other league games, the Cubs will finish the season tied with the Indians. However, the odds will be definitely on the Keewatin side in their four game series because of their pitching line-up. Dryden and Legion will also play the roles of villians in this exciting last act. Victories or defeats when

(Continued on Page 4)

WRIGHT THEATRE
SATURDAY MATINEE 1.30 P.M.
SATURDAY, MONDAY, and TUESDAY EVENINGS
PUBLIC PIGEON NO. 1 - Colour
Starring Red Skelton
Feature Starts 7.30 and 9.30 p.m.
Last Time Tonight: THE YOUNG STRANGERS
Feature Starts 7.30 and 9.30 p.m.

PATRONS PLEASE NOTE:
Admission Price Change Effective June 28, 1958
MATINEE PRICES
Adults 50c - Students 25c - Children 15c
EVENINGS
Adults 60c - Students 50c - Children (with parents) 25c
EVENINGS, SATURDAY and HOLIDAYS
Adults 60c - Students 50c - Children (with parents) 50c
Senior Citizens Pick up your Card at our Box Office

DRIVE-IN Theatre
JULY 28, 29, 30
Showing Saturday, Sunday Midnight, Monday
TIME LIMIT - War Drama
Starring Richard Widmark, Richard Basehart, Delores Michaels
ADULT ENTERTAINMENT
Last Time Tonight: BILLY THE KID
Robert Taylor - Brian Donlevy
Box Office Opens 8.30 - Show Starts Approx. 10.00 p.m.

LAST CHANCE!
ONLY 2 LEFT IN STOCK
THE FISHERMAN

The camp owners friend. A safe, seaworthy boat for all uses. Extra high bow and extra front seat wins immediate favor among fishermen. May be ordered with long deck if desired. Made of quality full length cedar in ⅜" thickness.

A Splendid Family Craft at an Unusually Low Price to Clear
Two Only - Each $295
EASY TERMS AVAILABLE
Bergman & Nelson Ltd.
2nd St., Kenora — Phone 8951

DANCING
KENORA ROWING CLUB
Marty and His Men
MODERN and OLD TIME MUSIC
FRIDAY NIGHT - 9 P.M. - 1 A.M.
ADMISSION $1.00
HOLIDAY JAMBOREE
FEATURING:
Ray Marquette
and THE TRADEMARKS
also
Red Marquette vocalist
SATURDAY NIGHT - 9 P.M. - 12.00
SUNDAY MIDNITE - 12.01 - ????
ADMISSION $1.00 PER PERSON

KINSMEN MONSTER

CAR BINGO

KENORA THISTLE RINK

MONDAY, JUNE 30th — 8.30 P.M.

$4500 IN PRIZES

1st GAME - CASH PRIZE $40.00
2nd GAME - CASH PRIZE $50.00
3rd GAME - CASH PRIZE $60.00
4th GAME - CASH PRIZE $70.00
5th GAME - CASH PRIZE $80.00
6th GAME - CASH PRIZE $90.00
7th GAME - CASH PRIZE $100.00
8th GAME - 8 m.m. Movie Camera and Projector ....Value $137.00
9th GAME - 1958 Deep Freeze ZENITH 15 CU. FT. ..... Value $329.00
10th GAME - 1958 T.V. Set 21 INCH SCREEN MARCONI CONSOLE .Value $330.00

11th GAME

1958 PLYMOUTH
4 DOOR SEDAN

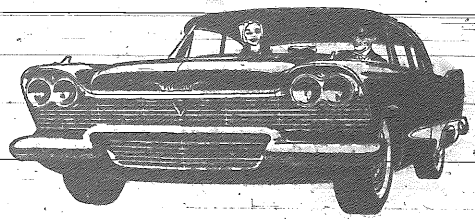

ADVANCE TICKET SALE

Save time at the rink. Buy your admission ticket (good at side doors) from Kenora Drug Stores or any Kenora Kinsman

ADMISSION

$2.50 ENTITLES TICKET HOLDER TO PLAY FIRST TEN GAMES ONLY.

SPECIAL CAR BINGO - CARDS MUST BE PURCHASED AT THE RINK -- PRICE, $1.00 EACH, TO PLAY THE 11th GAME.

Proceeds to be used for the Construction of a New

CHILDREN'S AID RECEPTION CENTRE

TOWN OF KENORA

TENDER FOR CONSTRUCTION OF A WATERWORKS BOOSTER PUMPING STATION

SEALED TENDERS, properly marked as to contents, will be received by F. J. Hooper, Town Clerk, Town of Kenora, Ontario, up to 8.00 p.m. C.D.T., Monday, July 14th, 1958 for the construction of a waterworks booster pumping station and appurtenant works located near the intersection of Ninth Avenue North and Sixth Street North.

Work includes the construction of a building approximately 25' x 20' with reinforced concrete sub-structure and brick superstructure.

Plans and Specifications may be obtained at the Office of the Town Engineer.

The lowest or any tender not necessarily accepted.

Project No. E.O. 5778

F. J. Hooper, Esq., Town Clerk

Proctor & Redfern, Consulting Engineers, Toronto.

NOTICE

TOWN OF KENORA

TAKE NOTICE that the Municipal Council of the Corporation of the Town of Kenora will take into consideration the passing and, if approved, will pass at its regular meeting to be held on Monday, the 28th day of July, 1958, at the hour of 8.00 o'clock in the evening at the Council Chambers, Municipal Building, Kenora, a By-law for the stopping up a portion of Railway Street lying East of East Street Line of Pump Avenue and North of Lot M in Plan 190, situate in the Town of Kenora.

The said portions are as follows:

ALL AND SINGULAR that certain parcel or tract of land and premises, situate, lying and being in the Town of Kenora, in the District of Kenora, being composed of part of Railway Street lying North of Lot M Plan 190 and which said parcel or tract of land may be more particularly described as follows:

COMMENCING where an iron bar has been planted defining the South West Angle of the herein described parcel being also the North West Angle of Lot M Plan 190;

THENCE North 80 degrees 40 minutes East 221.66 feet along the Southerly limit of Railway Street to where an iron bar has been planted;

THENCE due North 66.86 feet to where an iron bar has been planted;

THENCE South 80 degrees 40 minutes West 221.66 feet along the Northerly limit of Railway Street to where an iron bar has been planted;

THENCE due South 66.86 feet to the point of commencement.

AND FURTHER TAKE NOTICE THAT THE SAID COUNCIL WILL, at the aforesaid time and place, hear in person or by his Counsel, Solicitor or Agent, any person who claims that his land will be prejudicially affected by any of the aforementioned By-law and who applies to be heard.

DATED at Kenora, Ontario, this 19th day of June, 1958.

F. J. Hooper,
Clerk, Town of Kenora.

"Do's and Don'ts" For Water Safety

Do you know the Water Safety DO'S and DON'TS.

DO . . . .

Parctice the Holger - Neilsen Method of Artificial Respiration and take every opportunity to teach others.

Always swim with at least TWO other people.

Know your swimming area, and check the bottom carefully before playing or diving.

See that all non-swimmers wear life jackets when they are playing in or near the water, and make a hard and fast rule that they must be worn in a boat.

Hang on to your boat if it should tip or capsize. Unless the craft is completely unseaworthy (and if it was more fool you for going out in it) the boat will not sink, even with an outboard attached.

DON'TS . . . .

Never swim when you are overheated or overtired. Cool off, or rest, before diving into the cold water.

Never swim after dark. A body could not be located until the next morning.

Horseplay around a swimming area could cause a serious accident. It also could frighten a non swimmer into hating the water.

Hommade rafts and logs can be extremely dangerous as they drift out to deep water. Only an experienced swimmer should be allowed to build and play with these hommade rafts.

Never buy a life jacket unless it bears the stamp of the APPROVED DEPARTMENT OF TRANSPORT label. Other jackets may be cheaper, but they also, by actual test, have been proven inferior. The life of a child is worth the few extra dollars.

Stock Quotations

Supplied by James Richardson and Sons

1.00 p.m. Quotations

INDUSTRIALS		
Aluminum		25.50
Abitibi		27.75
Brazilian		6.125
Cdn Pacific Rlwy		26.50
Cons Paper		33.50
Cons Smelters		19.50
Ford "A"		81.50
Internatl Nickel		75.375
Massey Ferguson		7.50
M & O Paper		26.00
A. V. Roe		15.00
Steel of Cda		59.25
Wpg & Central Gas		6.875
MUTUAL FUNDS		
Cdn Investment Funds	8.44b	9.25a
Investors Mutual	9.95b	10.76a
Investors Growth Fund	5.31b	5.75a
OILS		
B. A. Oil		40.00
Cdn Devonian		6.15
Central Del Rio		8.10
Home Oil "A"		19.125
Imperial Oil		43.50
United Oil		2.22
PIPELINES		
Alberta Gas Trunk "A"		16.375
Nor. Ont. Nat'l Gas		13.125
Quebec Nat'l Gas		22.75
Trans Cda Pipe		25.875
Westcoast Trns.		20.50
MINES		
Can Met. Ex.		1.48
Cochenour Willans		2.62
Cons Denison		15.625
Geco		13.75
Giant Y. K.		6.35
Gunnar		18.25
Hudson Bay M & S		45.25
Kerr Addison		18.125
Madsen R. L.		2.37
New Dickenson		2.27
Norpax Nickel		.21
Noranda		42.50
Opemiska Cpr		8.70
Purdex		.13
Steep Rock		9.70
BANKS		
Bk of Nova Scotia		60.75
Cdn Bk of Commerce		47.50
Imperial Bank		49.50
Royal Bank		64.00
Toronto Dominion		45.00

Off the Cuff . . .

(Continued from Page 2)

they play, Norman and Keewatin will give the race a great deal of ending excitement. Legion will add their first bit this evening when they play host to Norman . . the Cubs have to win this one. Norman will really have to give the 'ol college try at the Park this evening; a loss would mean submission . . . a victory over the first pace Legionaires would mean the gravy train toward a turkey home. Dryden play their part on Sunday when they encounter Keewatin in a double header in the flour town. Word is afloat that Dryden want sweet revenge for their double loss five days ago to this Keewatin team and that this double header ought to be a real thriller; in a baseball play that is turning out to be a best performance production.

(BERNIE MAJOR went the distance for the Norman team last evening in Keewatin and he also drove in the game's winning run. Bernie chalked up his second victory of the season on the mound but just who the Cubs will use to pitch against Legion tonight, remains to be seen. Game time is 6.30 p.m. . . .

INSIST ON THE LOCAL PRODUCT

Five Roses Flour

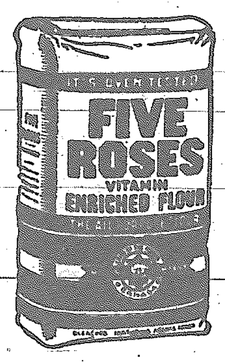

☆ ☆ ☆

FIVE ROSES is completely all-purpose milled right here in Keewatin to give you the finest results in everything you bake.

☆ ☆ ☆

A Canadian favourite for three generations . . .

guaranteed quality . . . vitamin enriched.

FIVE ROSES

"CANADA'S MOST RESPECTED NAME IN BAKING"

WHITE ROSE SERVICE STATION

WE SERVICE ALL MODELS AND MAKES

14 Point Check

Only $1.50

WE SERVICE ALL MODELS AND MAKES

- ★ Lubricate & Fittings
- ★ Lubricate Steering Box
- ★ Lubricate Starter
- ★ Lubricate Generator
- ★ Lubricate Distributor
- ★ Lubricate Carburator Linkage
- ★ Springs if Needed
- ★ Check Rad
- ★ Change Oil if Needed
- ★ Sweep out Car
- ★ Check All Tires
- ★ Check Transmission & Differential
- ★ Check for Work needed
- ★ Clean Glass

FOR APPOINTMENT PHONE 8984

Kenora Motor Products Ltd.

Main St. KENORA

BARN DANCE

WILL BE HELD AT THE

Kenora Agricultural Society Building - Rabbit Lake

Saturday, June 28

ADMISSION 75c DANCING 9 TO 1

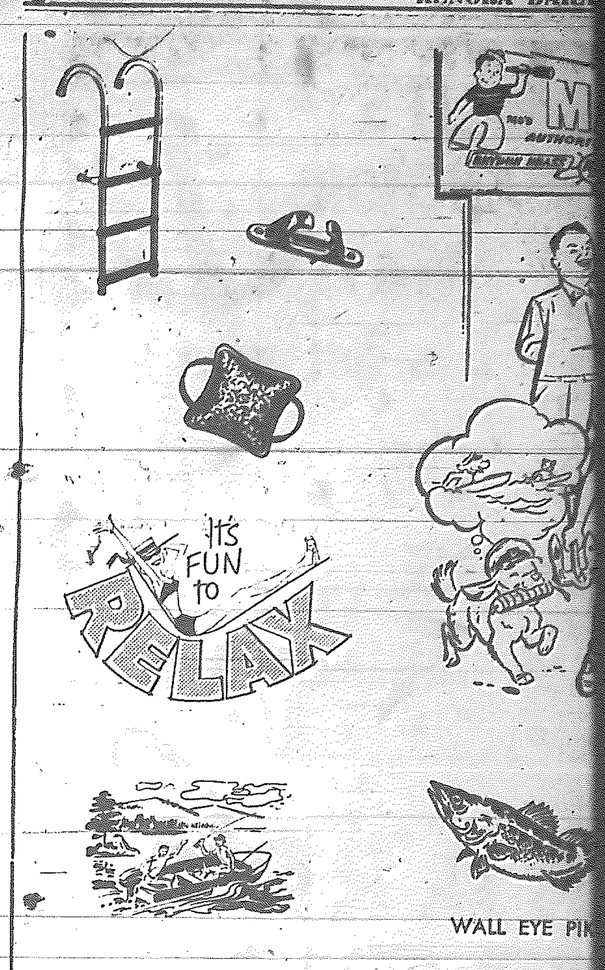

USED (BUT JUST LIK COVERED BOA

SPECIAL TO RESIDENTS OF TH

A used Peterborough Speedster, Just Like New Complete with a 1955 JOHNSON 25 h.p. Motor, Overhauled and with a New Motor Warranty. Painted the new colours. Complete with 2 New Cushions & 1 Paddle

$59

KENORA BOATING E

FLASH

A RECO EQUIPP PRESERVER

EXCITING VACATION IDEAS!

headed in the flour town. Word is afloat that Dryden want sweet revenge for their double loss five days ago to this Keewatin team and that this double header ought to be a real thriller; in a baseball play that is turning out to be a best performance production.

BERNIE MAJOR went the distance for the Norman team last evening in Keewatin and he also drove in the game's winning run. Bernie chalked up his second victory of the season on the mound but just who the Cubs will use to pitch against Legion tonight, remains to be seen. Game time is 6.30 p.m. . . .

E LOCAL PRODUCT

oses Flour

☆ ☆ ☆

FIVE ROSES is completely all-purpose milled right here in Keewatin to give you the finest results in everything you bake.

☆ ☆ ☆

vourite for three generations . . .
quality . . . vitamin enriched.

E ROSES

T RESPECTED NAME IN BAKING"

ROSE
TATION

Check
.50

WE SERVICE ALL MODELS AND MAKES

★ Check Rad
★ Change Oil if Needed
★ Sweep out Car
★ Check All Tires
★ Check Transmission & Differential
★ Check for Work needed
★ Clean Glass

T PHONE 8984

Products Ltd.
KENORA

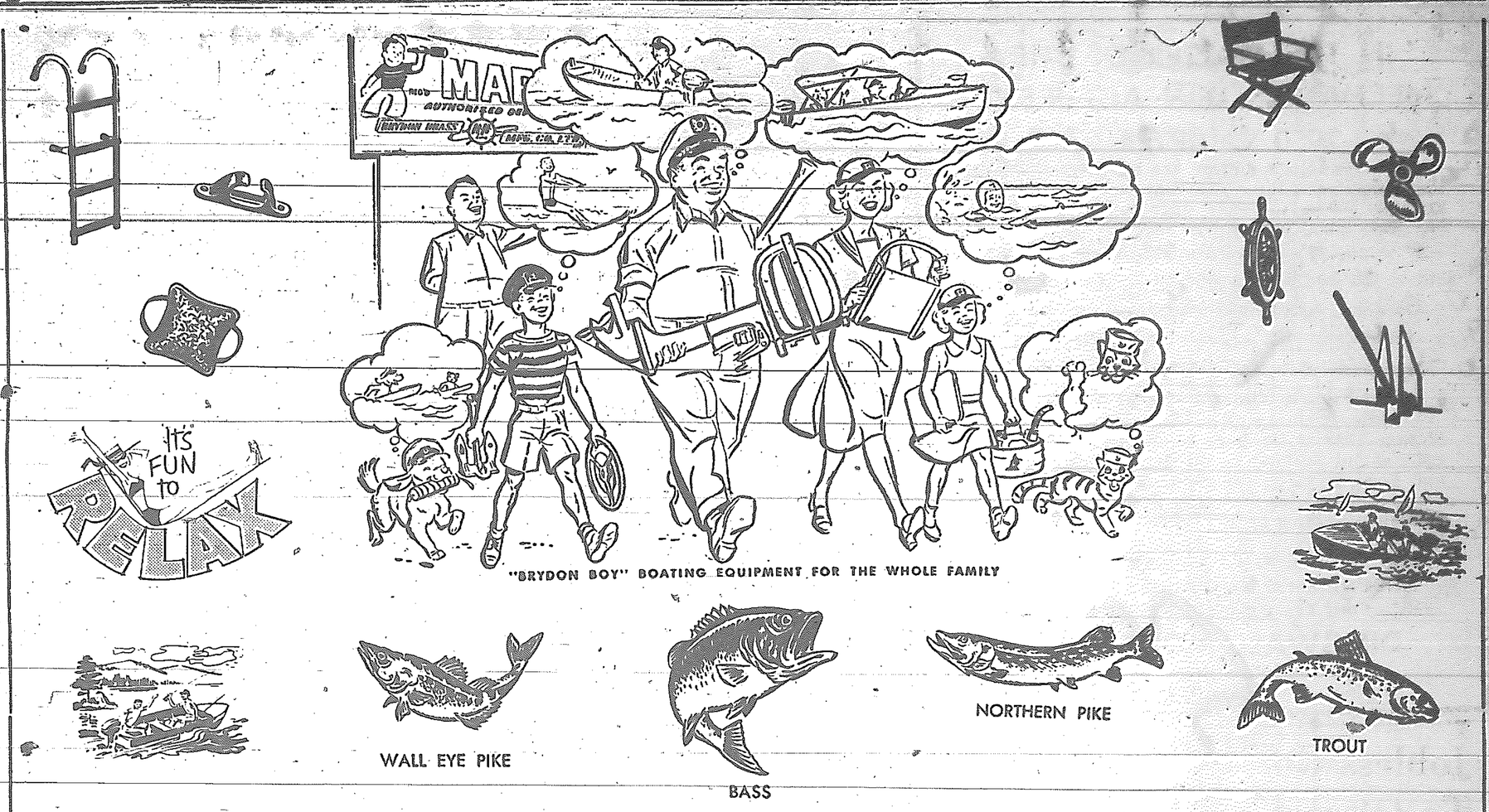

USED (BUT JUST LIKE NEW) THOMPSON BUILT 12' CAR TOPPER CANVAS COVERED BOAT, COMBINED WITH THE FISHERMAN'S DREAM - - THE 1958 JOHNSON 5½ H.P. MOTOR

EQUIPPED WITH 2 GOVERNMENT APPROVED CUSHIONS & 1 PADDLE

at

$425.00

SPECIAL TO RESIDENTS OF THE KENORA AREA

BETTER BUY NOW

A used Peterborough Speedster, Just Like New Complete with a 1955 JOHNSON 25 h.p. Motor, Overhauled and with a New Motor Warranty. Painted the new colours. Complete with 2 New Cushions & 1 Paddle

$595.00

LOW PRICES ON BOATS & MOTORS

A New Crestliner Aluminum Boat 14' x 63" x 26" combined with a Used Mercury "Mark 20" complete with Mooring Cleats, Ropes, 2 Cushions and 1 Paddle. Come and try this one!

$815.00

KENORA BOATING ENTHUSIASTS OFFERED NEW

MARR'S MARINE OFFER TWO WEEKS WITH PLAY

FLASH

$195.00

A USED CANADIAN 14' "CLIPPER," NICELY PAINTED, AND POWERED WITH A RECONDITIONED JOHNSON 10 H.P. MOTOR EQUIPPED WITH TWO GOVT. APPROVED LIFE PRESERVER CUSHIONS AND ONE HARDWOOD PADDLE

MARINE AND ELECTRICAL DISTRIBUTORS

Marr's marine & electric (kenora) limited

PHONE 9670 • PARTS DEPARTMENT 9669 • P.O. BOX 478

323 MAIN ST. SOUTH
KENORA, ONTARIO

EXCITING VACATION IDEAS!

IN THE MATTER OF THE MECHANICS LEIN ACT R.S.O. 1950 CHAPTER 27

Whereas the following persons are indebted to the undersigned for repair bills and storage in the amounts set out opposite their Names and default has been made in payment thereof:

W. Ambrozy - 1948 1 Ton Truck $107.92
Daiter's Cabins, Kenora - Serial No. DF 83H48-12433

Mr. John Shaw - 1949 Monarch $126.40
Chilliwack, B.C. - Serial No. 0372H49-22629

Mr. Ernest Bowden - 1938 Ford $23.55
Fort Frances, Ontario - Serial No. 4B1923

Notice is hereby given that on Monday the 30th of June 1958 at the hour of 2 o'clock in the afternoon at our parking lot on the corner of Chipman and First Street South in the town of Kenora the goods and Chattels hereafter described will be sold by Public Auction by Mr. Ed Norton acting as Auctioneer.

1949 Monarch Serial No. 0372H49-22629
1938 Ford Serial No. 4 B1923
1948 Ford Truck Serial No. DF83H48-12433

DINGWALL MOTORS LTD.
230 First Street South
Kenora, Ontario

FINLEY A. CAMPBELL who recently received a Ph.D degree in geology from Princeton university. The son of Mr. and Mrs. Finley Campbell of 306 College street, Mr. Campbell graduated from Brandon college in 1950 with a bachelor of science degree, and from Queen's university with a master's degree. He and his wife will make their home in Edmonton, where Mr. Campbell has accepted the position of professor of geology at the University of Alberta.

IT'S ANCHORS AWAY!
when you get your
★ GAS
★ ICE
★ MINNOWS
at
MARR'S
NORTH STAR DOCK

Jobless Go To Ottawa In Motorcade

OTTAWA — An Ontario-Quebec delegation of unemployed today called on the federal government to take tariff, tax and trade action to provide more jobs.

The delegation proposed:

1. Intensified efforts to move Canada's wheat surplus to boost the farm economy and thus provide a wider market for the products of farm implement plants.
2. Taxing the automobile industry on its profits rather than on the product, to increase plants.
3. An investigation into the volume of small cars entering Canada from Europe, with a view to encouraging their manufacturers to locate production plants in Canada.
4. A clampdown on the importation of automobile parts into this country.
5. Action to assist the Canadian textile industry.

The delegation started out from Windsor and Montreal by motorcade and picked up groups at Chatham, London, Woodstock, Brantford, Hamilton and Toronto.

George Burt of Windsor, Canadian director of the 75,000-member United Automobile Workers Union and a general vice-president of the Canadian Labor Congress, was chief spokesman for the delegation in a meeting with cabinet ministers in Parliament's Centre Block.

Man Hit 3 Times By His Own Car

Frankfort, Ky. — — Lewis Aldridge, 65, was hit three times by his own car as he was backing it from his farm yard he fell out.

The car, he said, kept going in circles, and each time he tried to get up, it hit him again. Witnesses dragged Aldridge out of the way and stopped the auto. He suffered four broken ribs.

LONDON — A dead-end street in London's Farringdon district is named "Turnagain Lane."

NU-WAY
Cleaners & Launderers
Quality Guaranteed Work
SHIRTS
Beautifully Laundered
PHONE 8978
NU-WAY
2 HOUR
Drycleaning Service

BUYING AN OUTBOARD MOTOR?

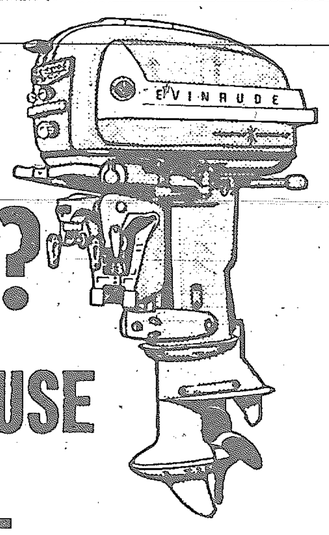

DINGWALL'S SELL FOR LESS BECAUSE IT COSTS THEM LESS TO SELL

★ OUR LOW OVERHEAD ALLOWS US TO MAKE THIS CLAIM
★ YOU LOSE NOTHING BUT THE OPPORTUNITY
★ WE SUPPLY FACTORY AUTHORIZED SERVICE

FOR A LIMITED TIME ONLY
FREE AN EXTRA CRUISE-A-DAY TANK WITH EVERY NEW EVINRUDE PURCHASE - A $29.50 VALUE

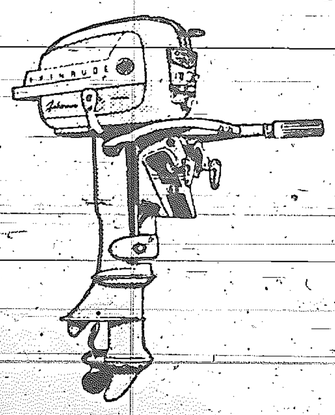

ALL MODELS IN STOCK
SEE US FIRST
PHONE BILL GABRYLUK
Office 6484 - Home 9118

Dingwall Motors Ltd.

SH

The F
Will Be
Your S

OLFM
CLOTHING
NEXT TO THE NOR

McLE
SHOE S

Jack P
2nd ST. SOUTH
Credit J

SAFE
TWO ST
- Lakeside -
Supermarket

TOM HI
Men's and B

NORTH STAR
When I
At Y
And Fill Y

IT'S
NCHORS
AWAY!
you get your
GAS
ICE
MINNOWS
at
ARR'S
STAR DOCK

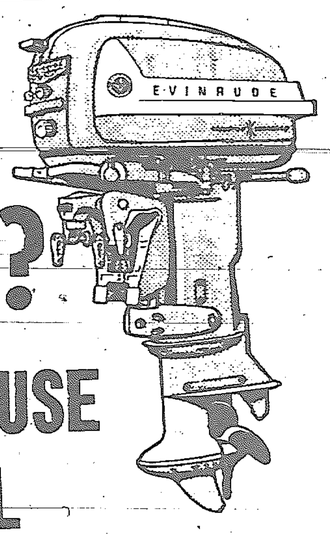

R?
CAUSE
ELL
MAKE THIS CLAIM
TUNITY
RVICE

Y
TANK WITH
SE - A $29.50 VALUE

IN STOCK
FIRST
GABRYLUK
Home 9118

ors Ltd.

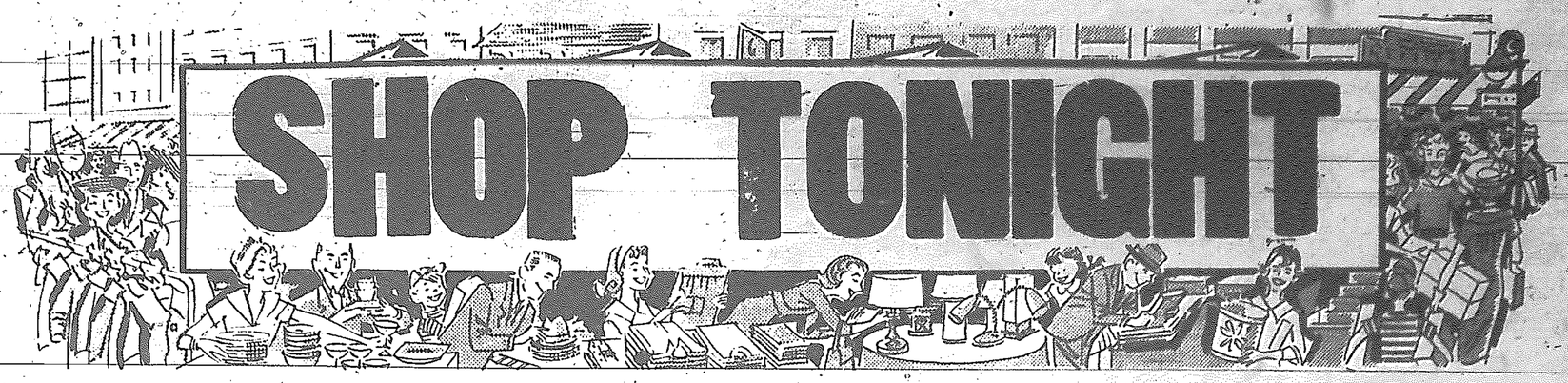

The Following Merchants Will Be Open 'Til 9.00 p.m. For Your Shopping Convenience

OLFMAN'S
CLOTHING CENTRE
NEXT TO THE NORTHLAND HOTEL

Kenora's Largest Waterfront Marine Centre
MARINE AND ELECTRICAL DISTRIBUTORS
Marrs
marine & electric (kenora) limited
Main Street at Lake of the Woods

McLEOD'S
SHOE STORE

Ella-Lynn's
146 MAIN STREET

Jack Penner
2nd ST. SOUTH — *Credit Jeweller* — 2nd ST. SOUTH

KENORA MOTOR PRODUCTS LTD.
USED CAR LOT
AT THE
WHITE ROSE SERVICE STATION

SAFEWAY
TWO STORES
- Lakeside - Supermarket
Main Street - Store -

ZEAL and GOLD
WE CARRY THE FINEST
MERCHANDISE OBTAINABLE

TOM HINTON'S
Men's and Boys' Wear

Bill's Shoe Box
"Where prices are born . . . not raised"

NORTH STAR
When Down Town Shopping... Stop In
At Your North Star Service Station
And Fill Your Tank With NORTH STAR GAS
NORTH STAR

WESTARIO MOTORS ANNUAL JULY CLEARANCE

MID SUMMER SALE of QUALITY USED CARS

JUNE 27 TO JULY 12

FREE DRAW

$200.00 IN CASH

FREE TICKET TO ANYONE PURCHASING A USED CAR DURING THE JULY CLEARANCE SALE.

DRAW 9 P.M. - JULY 12, 1958

★ SAVINGS ★ TOP TRADE-IN ALLOWANCE
★ WRITTEN GUARANTEE ★ FINANCING & INSURANCE QUICKLY ARRANGED

1950 OLDSMOBILE
SEDAN
AUTOMATIC TRANSMISSION, RADIO,
REG. $795.00 - SAVE $200.00 ..... **$595**

1953 PONTIAC
SEDAN
RADIO, SIGNAL LITES,
REG. $1,295.00 - SAVE $300.00 **$995**

1957 PLYMOUTH
HARDTOP
V-8 MOTOR, RADIO, SIGNAL LITES, QUALITY CAR
REG. $2,895.00 - SAVE $300 **$2595**

1956 METEOR
COACH
HEATER, SIGNAL LITES, WINDSHIELD WASHER
REG. $1,895.00 - SAVE $200 **$1695**

SALESMEN
ED LUGOSSY 21W3
BILL CALDER 9339
RALPH GIBSON 7994

Westario Motors
Open Air Showroom
PHONE 8993 NEXT TO THE FIRE HALL PHONE 8993

Around Town

The Calvary Church Sunday School picnic will be held Saturday afternoon June 28th. Those planning on attending are asked to meet at the Argyle Dock at 12.45 p.m. All are welcome.

Mrs. M. Rogers accompanied by her son-in-law and daughter, Mr. and Mrs. L. Carlson were visitors to Winnipeg Wednesday. They attended the graduation exercises of St. Boniface Hospital, at which Mrs. Rogers daughter, Miss Jeanne Rogers was one of the graduates.

Miss Sandra Kincaid who has joined the RCAF, leaves Saturday evening for the RCAF training station at St. John's, Quebec.

Mr. and Mrs. Caryl Byers of Port Arthur motored to Kenora on Tuesday, returning home on Thursday. They were called to Kenora, owing to the serious illness of Mr. Byer's mother, Mrs. E. W. Byers.

Playmates of Murray Soderberg are happy to have him home again. Murray who has been a patient for almost a year in the Shriner's Hospital, Winnipeg ,returned home yesterday.

Emeralds are among the softest of precious gems, opposite to diamonds, the hardest.

TENDERS FOR TRANSPORTATION

Sealed tenders marked "Tenders for Transportation" will be received by the undersigned up to 6 p.m. D.S.T., Friday, July 4, 1958, for the transportation of school children on each of the following routes for the school year commencing September 2, 1958.

1. Airport-Rabbit Lake to Rabbit Lake School and Kenora-Keewatin District High School.
2. East Highway from east boundary of Jaffray Township to Kenora-Keewatin District High School and to Rabbit Lake School.
3. Redditt Road to Kenora-Keewatin District High School - 14 to 20 pupils.
4. Gould Branch Road to Rabbit Lake School.
5. Anderson Branch Road to Public School No. 1 and to Rabbit Lake School.
6. East Melick and Airport Road to Rabbit Lake School and to Kenora-Keewatin District High School - 30 to 40 pupils.

The vehicle to be used and the operator of same must be properly licenced and in all respects meet the requirements of the Public Vehicles Act and the regulations thereunder.

The lowest or any tender not necessarily accepted. Full details may be obtained from the undersigned.

G. L. Thomas, Secretary-Treasurer, Township School Area of Jaffray-Melick, R.R. 1, Kenora, Ont.

South
Held
Thurs

In idea
from Grad
Ward par
nual Play
noon.
Under
teachers,
from Grad
vities, wh
contest, b
ping, obst
rolling and
The te
colours a
numbers
grades. At
had the w
A picnic
joyable af
Leaders
John Gre
Iogo, Shar
gengash, K
lys Wilson
The win
Bastien,
Jimmy B
Jimmy G
Bobby Pl
ald Palich
Merah W
Owen Gr
Gerry Wh

Keewa
Churc
Rev.

A large
bers of K
and other
to the Rev
whose ret
ministry
Mr. Brady
not only
but by th
Mr. A.
man, exp
the large
itself was
esteem h
guests we
A prese
Hi-C You
made to
Marilyn
las Magn
given fait
as one of
formation
years ago
Mrs. W
group wit
Bird Sin
Choir of
much-enj
A pres
Church
Holmes
Sunday S
the past
ton will
to take u
Mrs. C
gift to M
the W.
which s

ANNOUNCE

L. W. GOO

General Mach

1317 RIVER STREET, K

has opened his shop for General
Gear Cutting, Lathe Shaper W
Tool and Die Wo

ANYTHING IN THE LINE OF RE
STEAM ENGINE MOTOR BE

40 Years Experience as Machinist a
Marine and Stationary Se

AL
CASH
PURCH-
RING THE
12, 1958
RANCE
ARRANGED
TIAC
$995
TEOR
$1695
Motors
room PHONE
HALL 8993

Around Town

The Calvary Church Sunday School picnic will be held Saturday afternonn June 28th. Those planning on attending are asked to meet at the Argyle Dock at 12.45 p.m. All are welcome.

Mrs. M. Rogers accompanied by her son-in-law and daughter, Mr. and Mrs. L. Carlson were visitors to Winnipeg Wednesday. They attended the graduation exercises of St. Boniface Hospital, at which Mrs. Rogers daughter, Miss Jeanne Rogers was one of the graduates.

Miss Sandra Kincaid who has joined the RCAF, leaves Saturday evening for the RCAF training station at St. John's, Quebec.

Mr. and Mrs. Caryl Byers of Port Arthur motored to Kenora on Tuesday, returning home on Thursday. They were called to Kenora, owing to the serious illness of Mr. Byer's mother, Mrs. E. W. Byers.

Playmates of Murray Soderberg are happy to have him home again. Murray who has been a patient for almost a year in the Shriner's Hospital, Winnipeg ,returned home yesterday.

Emeralds are among the softest of precious gems, opposite to diamonds, the hardest.

TENDERS FOR TRANSPORTATION

Sealed tenders marked "Tenders for Transportation" will be received by the undersigned up to 6 p.m. D.S.T., Friday, July 4, 1958, for the transportation of school children on each of the following routes for the school year commencing September 2, 1958.

1. Airport-Rabbit Lake to Rabbit Lake School and Kenora-Keewatin District High School.
2. East Highway from east boundary of Jaffray Township to Kenora-Keewatin District High School and to Rabbit Lake School.
3. Redditt Road to Kenora-Keewatin District High School - 14 to 20 pupils.
4. Gould Branch Road to Rabbit Lake School.
5. Anderson Branch Road to Public School No. 1 and to Rabbit Lake School.
6. East Melick and Airport Road to Rabbit Lake School and to Kenora-Keewatin District High School - 30 to 40 pupils.

The vehicle to be used and the operator of same must be properly licenced and in all respects meet the requirements of the Public Vehicles Act and the regulations thereunder.

The lowest or any tender not necessarily accepted. Full details may be obtained from the undersigned.

G. L. Thomas, Secretary-Treasurer, Township School Area of Jaffray-Melick, R.R. 1, Kenora, Ont.

South Ward School Held Play Day Thursday Afternoon

In idea weather the students from Grades one to four in South Ward participated in their annual Play Day, Thursday afternoon.

Under the supervision of the teachers, eight leaders chosen from Grade IV, directed the activities, which included the potato contest, bean bag throw, skipping, obstacle course run, hoop rolling and ball test.

The teams were named for colours and comprised of equal numbers of students from all grades. At the finish the Red Team had the winning score.

A picnic lunch brought an enjoyable afternoon to a close.

Leaders were, Frank Bergman, John Green, Vern Green, Brian Ingo, Sharon Jorgenson, Joan Nagengash, Karin Shodin and Marlys Wilson.

The winning team was: Burton Bastien, Captain; Carol Wicks, Jimmy Burley, Kendall Green, Jimmy Gunn, Donna Kantola, Bobby Platt, Sheila Olson, Donald Palichuk, Peggy MacDonell, Merah Wilson, Penny Edwards, Owen Green, Janet Law, and Gerry Whitaker.

Keewatin United Church Honours Rev. & Mrs. Brady

A large gathering of members of Keewatin United Church and other families paid tribute to the Rev. and Mrs. W. T. Brady, whose retirement from the active ministry takes effect June 30. Mr. Brady will be greatly missed not only by the congregation, but by the community as a whole.

Mr. A. H. Coles acted as chairman, expressing his pleasure at the large attendance, which in itself was testimony of the high esteem in which the honoured guests were held.

A presentation on behalf of the Hi-C Young People's Group was made to Mr. and Mrs. Brady by Marilyn Christianson and Douglas Magnusson. Mrs. Brady has given faithful service to this group as one of its counsellors since the formation of the group several years ago.

Mrs. W. Powell entertained the group with a vocal solo, "A Brown Bird Singing", and The Ladies' Choir of the Church sang several much-enjoyed numbers.

A presentation on behalf of the Church was made by Mr. E. L. Holmes to Mr. F. W. Rushton, Sunday School superintendent for the past eleven years. Mr. Rushton will leave during the summer to take up residence in Montreal.

Mrs. C. Alexander presented a gift to Mrs. Brady on behalf of the W. I. Robertson Guild, in which she has been an active worker since coming to Keewatin.

On behalf of the Congregation, Mr. A. G. Holmes made a presentation of a purse to Mr. and Mrs. Brady. In making the presentation, Mr. Holmes referred to his many years of faithful service and Christian leadership they have given to the congregation, and to the fact that this gathering was not to say, "Good-bye", but "Au revoir."

Rev. R. J. Leighton, of Knox United Church, Kenora, spoke on behalf of his congregation, and also as the representative of Kenora-Rainy River Presbytery, and of the Kenora-Keewatin Ministerial Association all of which Mr. and Mrs. Brady are regarded with admiration, affection, and esteem. He expressed regret that Mr. Brady's services would no longer be available in these fields, and extended best wishes for happiness and health.

Following the presentatons, refreshments were served by the ladies of the church, assisted by members of the Hi-C Group.

Two aircraft make regular patrols to check game poachers in game reserves in Southwest Africa.

The St. Leger, Englands autumn horse race classic, started in 1776, four years before the first Derby at Epsom Downs.

Montreal harbor has main piers, wharves and jetties providing berths for 105 vessels.

NOTICE

THE GENERAL PUBLIC IS ADVISED THAT FISHING FROM THE SLUICE-WAY BETWEEN THE GENERAL HOSPITAL BRIDGE AND THE KENORA POWER HOUSE IS A VERY DANGEROUS PRACTICE.

THE ENTRANCES TO THIS SLUICE-WAY ARE MARKED WITH "NO TRESPASSING" SIGNS AND IN THE INTERESTS OF SAFETY, THE GENERAL PUBLIC IS ASKED TO COOPERATE BY KEEPING OFF THE SLUICE-WALKS.

IN FUTURE, THE "NO TRESPASSING" REGULATIONS WILL BE ENFORCED.

THE ONTARIO-MINNESOTA PULP & PAPER COMPANY LIMITED

LOGGING DIVISION,
KENORA, ONTARIO

Canadian Legion Kenora Branch

PRESIDENT'S BALL

MONDAY, JUNE 30th - 8 P.M.

ADMISSION BY INVITATION ONLY
FOR LEGION MEMBERS AND THEIR CONSORT
INVITATIONS ARE NOT TRANSFERABLE
REFRESHMENTS AND DANCING

ANNOUNCEMENT

L. W. GOODIE

General Machinist

1317 RIVER STREET, KENORA

has opened his shop for General Machine Work.
Gear Cutting, Lathe Shaper Work, Grinding,
Tool and Die Work

ANYTHING IN THE LINE OF REPAIRS TO PUMPS, STEAM ENGINE MOTOR BEARINGS, ETC.

40 Years Experience as Machinist and Steam Engineer, Marine and Stationary, Second Class

NOTICE

THERE WILL BE NO MILK DELIVERY

TUESDAY AND WEDNESDAY

JULY 1 AND 2

Please Arrange for 3 Day Delivery on Monday

THERE WILL BE REGULAR WHOLESALE DELIVERY

NEXT REGULAR RETAIL DELIVERY JULY 3rd

THIS IS TO ALLOW OUR DRIVERS
TO ENJOY THEIR EXTRA HOLIDAY

REMEMBER THERE IS MILK, BETTER MILK
AND CO-OP MILK

VACATIONLAND DAIRY CO-OP LTD.

1220 Ninth St. North -- Phone 7662